DRUMMAKER 45

SCHEMATIC DIAGRAM

Godwin ORGAN

BLOCK DIAGRAM

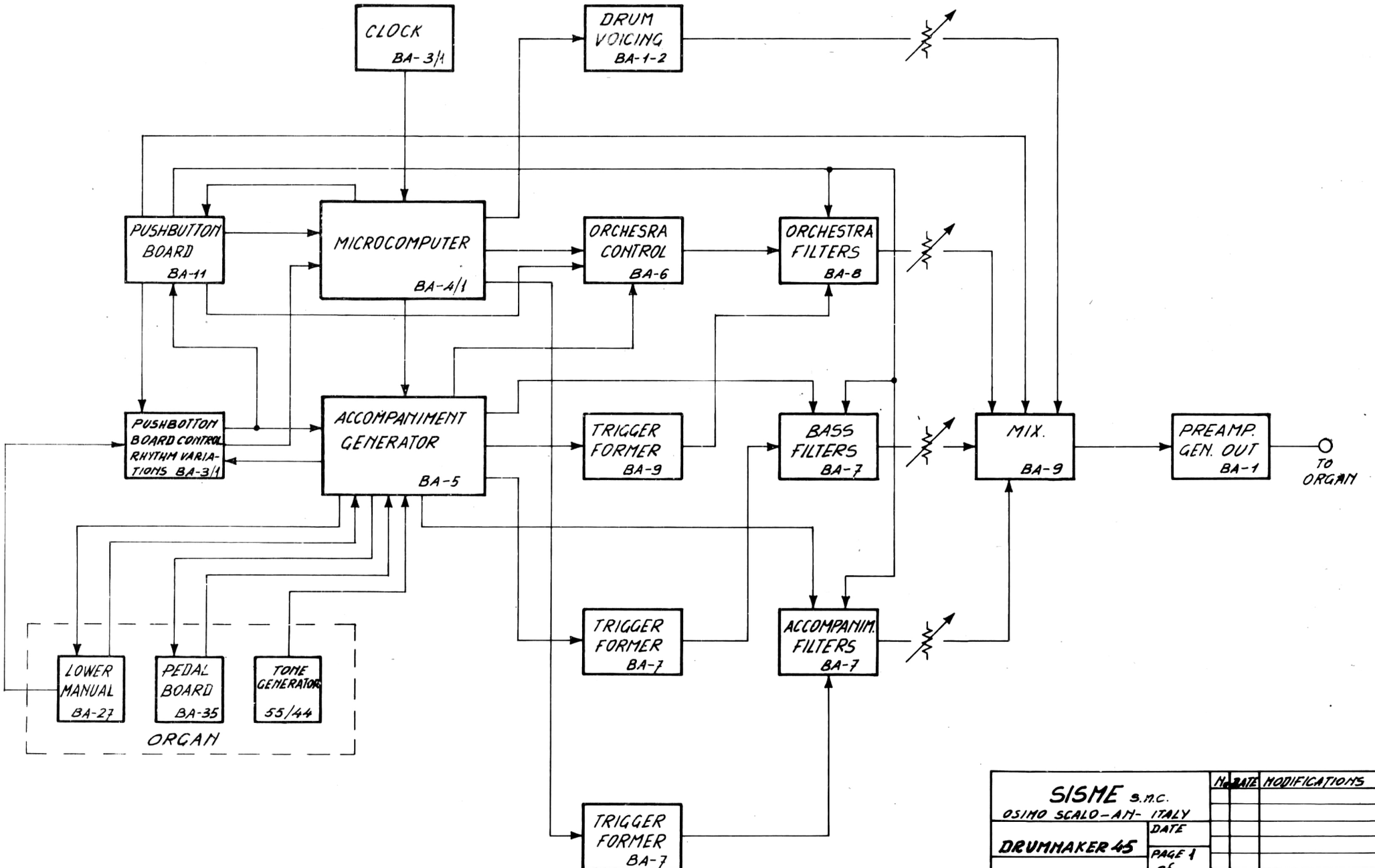

SISME S.n.c. OSIMO SCALO-AN- ITALY			No.	DATE	MODIFICATIONS
DRUMMAKER 45		DATE			
		PAGE 1 of PAGES 13			
DRAWN BY:	DESIGNED BY:	DES. No			

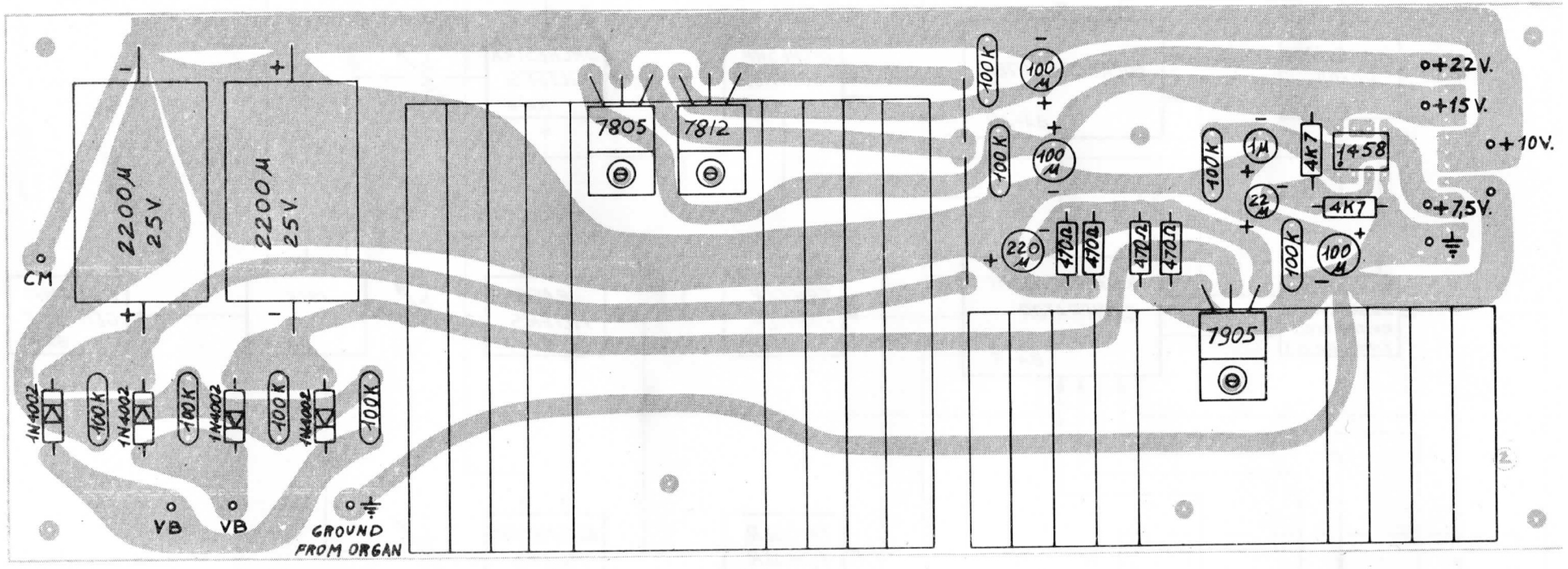
2200 µ
25 V.
2200 µ
25 V.
CM
1N4002
100 K
1N4002
100 K
1N4002
100 K
1N4002
100 K
VB
VB
GROUND
FROM ORGAN
7805
7812
100 K
100 K
100 µ
100 µ
220 µ
470 Ω
470 Ω
470 Ω
470 Ω
100 K
1 µ
22 µ
100 K
100 µ
4K7
4K7
1458
7905
+22 V.
+15 V.
+10 V.
+7,5 V.

META BA12

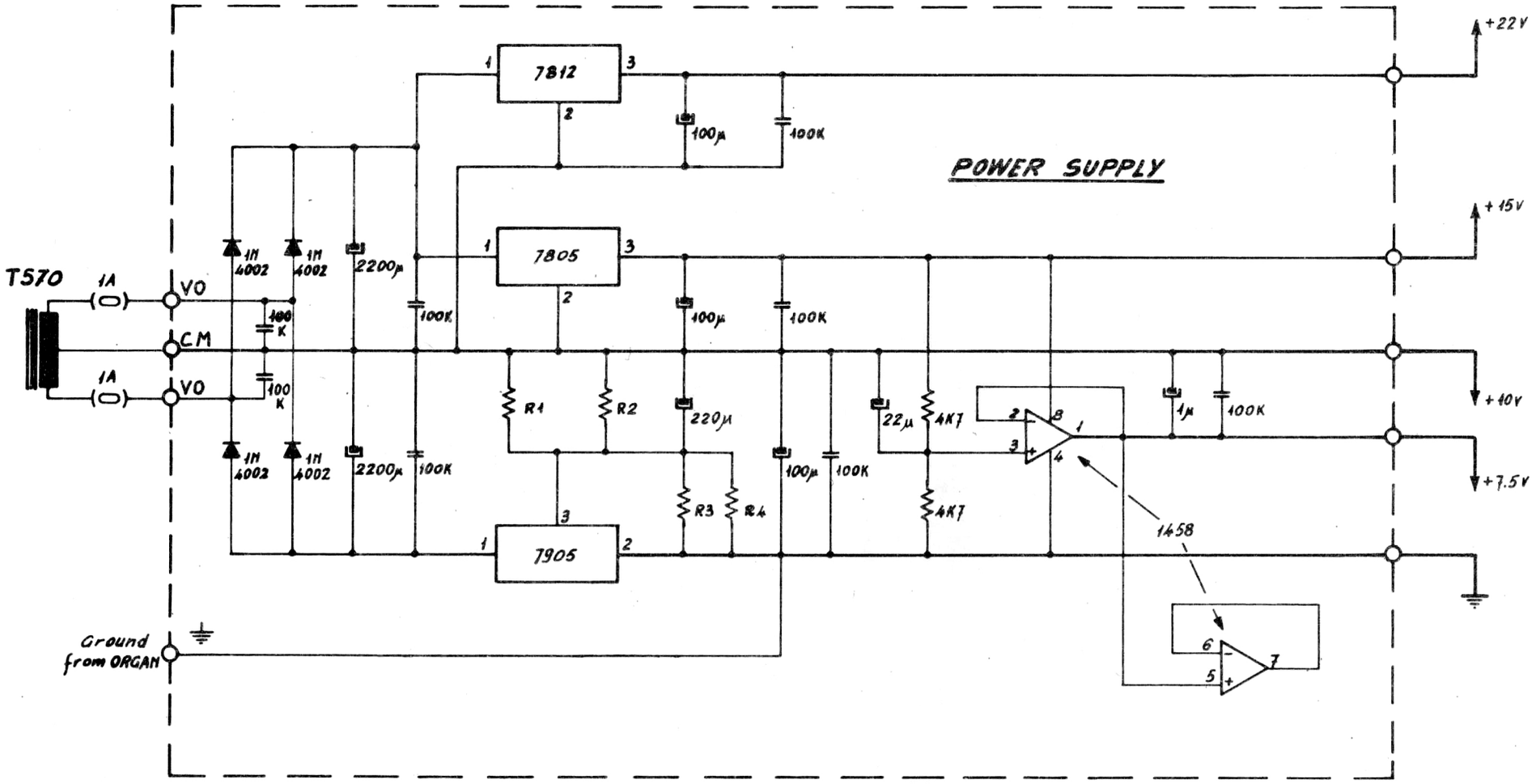

SISME S.n.c. OSIMO SCALO – AN – ITALY		No	DATE	MODIFICATIONS
DRUMMAKER 45	DATE 19-9-78			
P.C. Board BA-12	PAGE 2 of PAGES 13			
DRAWN BY:	DESIGNED BY:	DES. No		

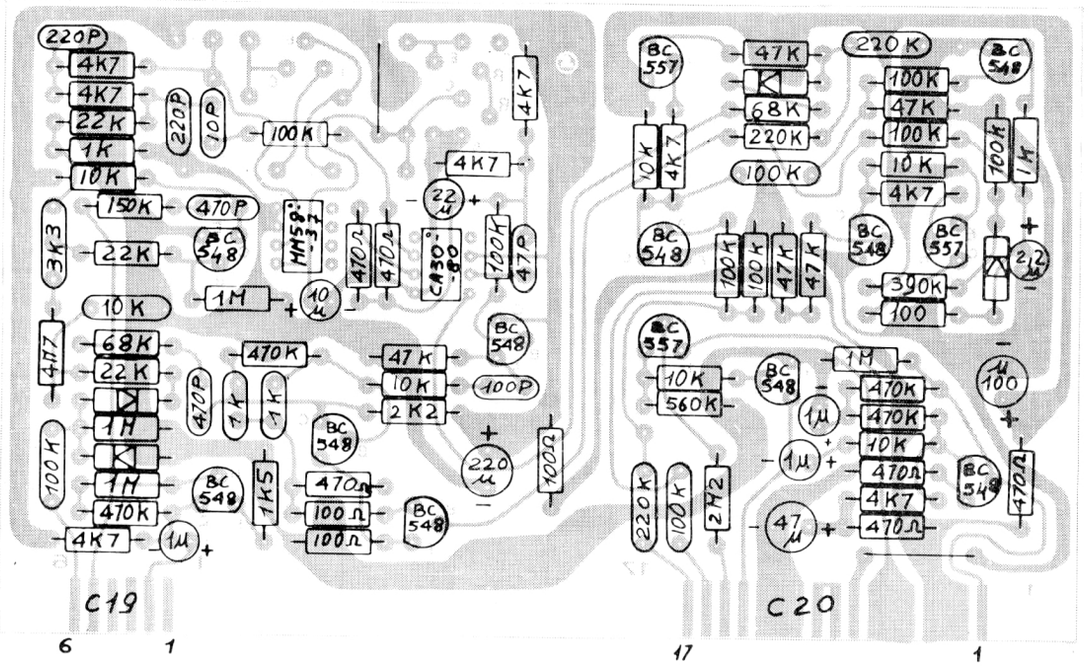
220P
4K7
4K7
22K
1K
10K
150K
470P
3K3
22K
BC 548
10K
1M
10 µ
4П7
68K
22K
470K
470P
1K
1K
1H
1H
470K
100K
4K7
1µ
BC 548
1K5
470K
470Ω
470Ω
MH59°-37
4K7
22 µ
CA30°-80
100K
47P
47K
10K
2K2
100P
BC 548
220 µ
100Ω
470Ω
100Ω
100Ω
BC 548
C19
6
1
BC 557
47K
68K
220K
100K
10K
4K7
220K
100K
47K
100K
10K
4K7
100K
1M
BC 548
BC 548
BC 557
100K
100K
47K
47K
390K
100
2,2 µ
BC 557
10K
560K
BC 548
1M
470K
470K
10K
470Ω
4K7
470Ω
1µ
1µ
47 µ
µ 100
BC 548
470Ω
220K
100K
2M2
C20
17
1

META BA1

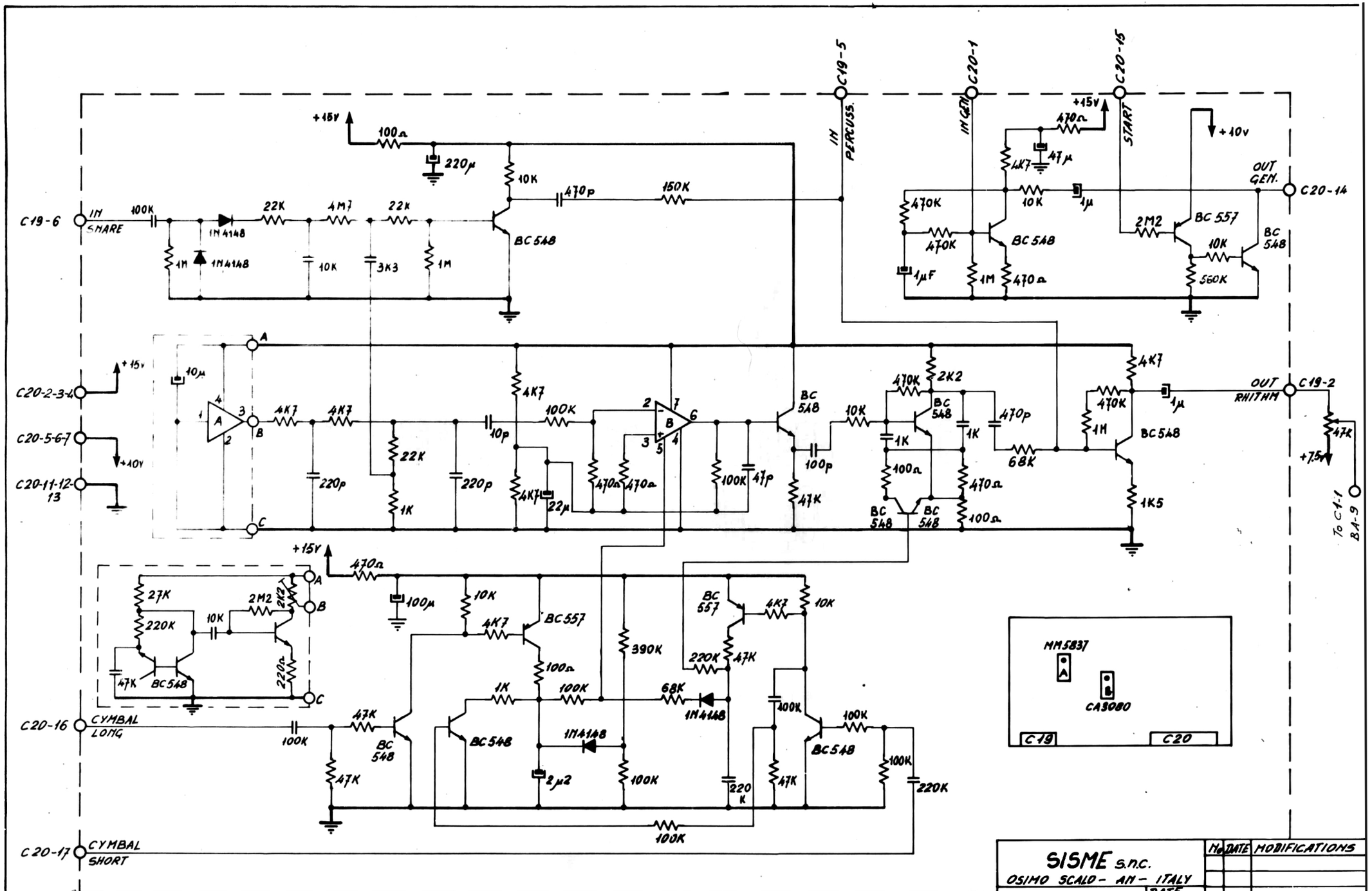

CYMBAL FILTERS / OUTPUT PRE-AMP.

SISME s.n.c. OSIMO SCALO - AN - ITALY			No	DATE	MODIFICATIONS
DRUMMAKER 45		DATE 19-9-78			
P.C. Board BA-1		PAGE 3 of PAGES 13			
DRAWN BY:	DESIGNED BY:	DES. No			

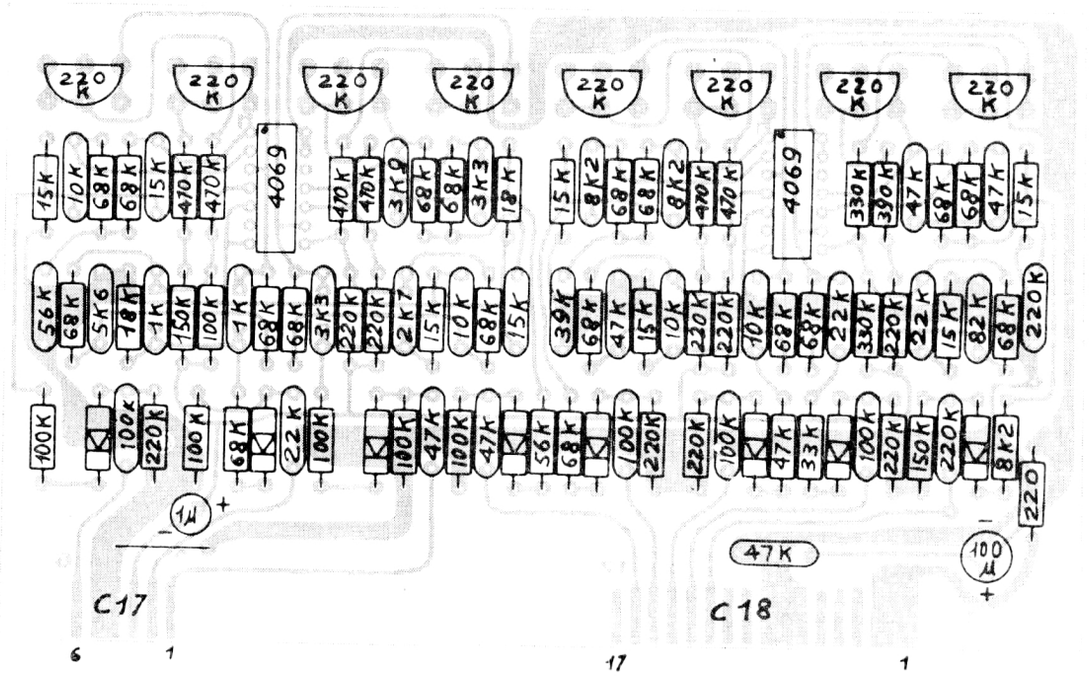
220 K
15K
10K
68K
68K
15K
470K
470K
4069
470K
470K
3K9
68K
68K
3K3
18K
15K
8K2
68K
68K
8K2
470K
470K
4069
330K
390K
47K
68K
68K
47K
15K
56K
68K
5K6
18K
1K
150K
100K
1K
68K
68K
3K3
220K
220K
2K7
15K
10K
68K
15K
39K
68K
47K
15K
10K
220K
220K
10K
68K
68K
22K
330K
220K
22K
15K
82K
68K
220K
100K
100K
220K
100K
68K
22K
100K
100K
47K
100K
47K
56K
68K
100K
220K
220K
100K
47K
33K
100K
220K
150K
220K
8K2
220
1μ
47K
100 μ
C17
C18
6
1
17
1

META BA2

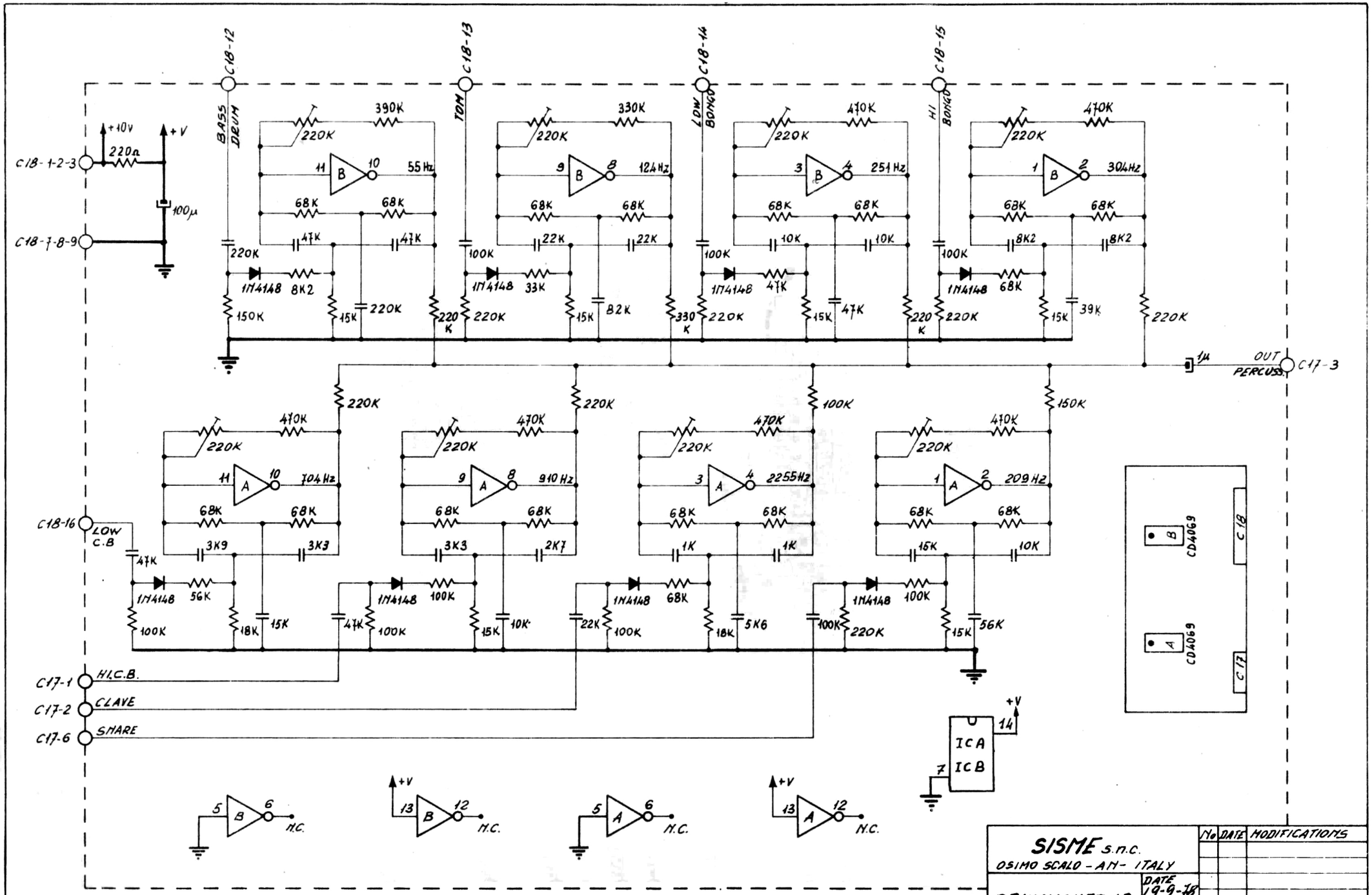

DRUM FILTERS

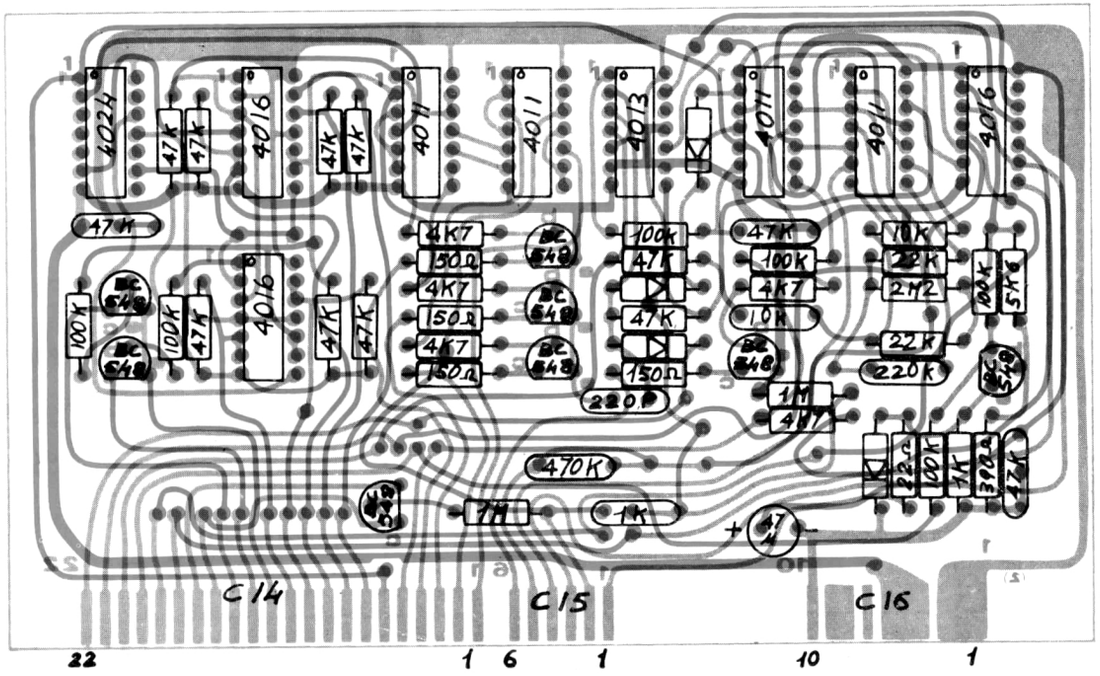
4024
4016
4011
4013
4016
47K
100K
BC 548
4K7
150Ω
220P
470K
1M
1K
10K
22K
2M2
220K
5K6
390Ω
C14
C15
C16
22
1
6
1
10
1

META BA3/1

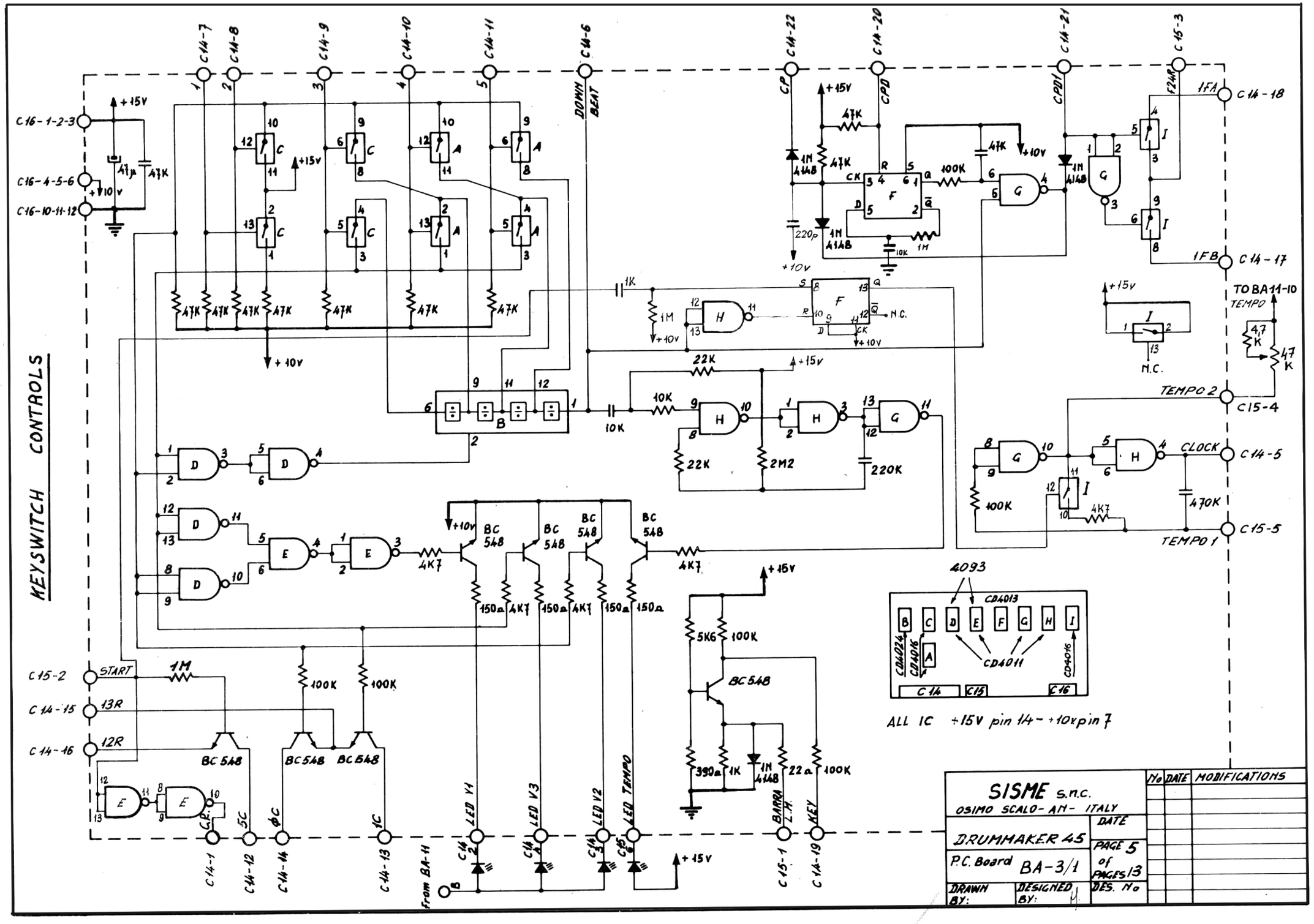
KEYSWITCH CONTROLS
C16-1-2-3
C16-4-5-6
C16-10-11-12
+15V
+10V
47µ
47K
C14-7
C14-8
C14-9
C14-10
C14-11
C14-6
DOWN BEAT
C14-22
C14-20
C14-21
C15-3
CP
CPD
CPDI
F24B
1FA
1FB
C14-18
C14-17
TO BA11-10
TEMPO
TEMPO 2
C15-4
CLOCK
C14-5
TEMPO 1
C15-5
N.C.
C15-2
START
C14-15
13R
C14-16
12R
C.P.
5C
ΦC
1C
C14-1
C14-12
C14-14
C14-13
from BA-11
LED V1
LED V3
LED V2
LED TEMPO
BARRA L.H.
KEY
C15-1
C14-19
BC 548
4093
CD4013
CD4011
CD4016
CD4024
C14
C15
C16
ALL IC +15V pin 14 - +10V pin 7
SISME s.n.c.
OSIMO SCALO - AN - ITALY
DRUMMAKER 45
P.C. Board BA-3/1
PAGE 5 of PAGES 13
DRAWN BY:
DESIGNED BY:
DATE
DES. No
No
DATE
MODIFICATIONS

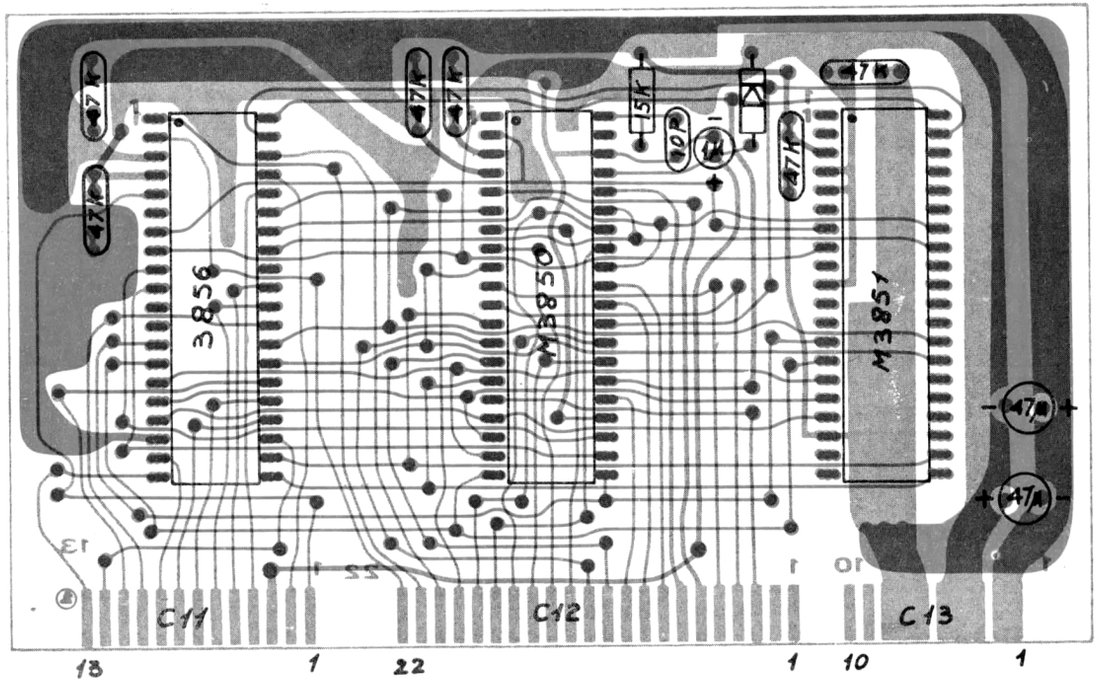
47K
47K
47K
47K
47K
47K
15K
10P
1K
3856
M3850
M3851
47A
47A
C11
C12
C13
13
1
22
1
10
1

META BA4/1

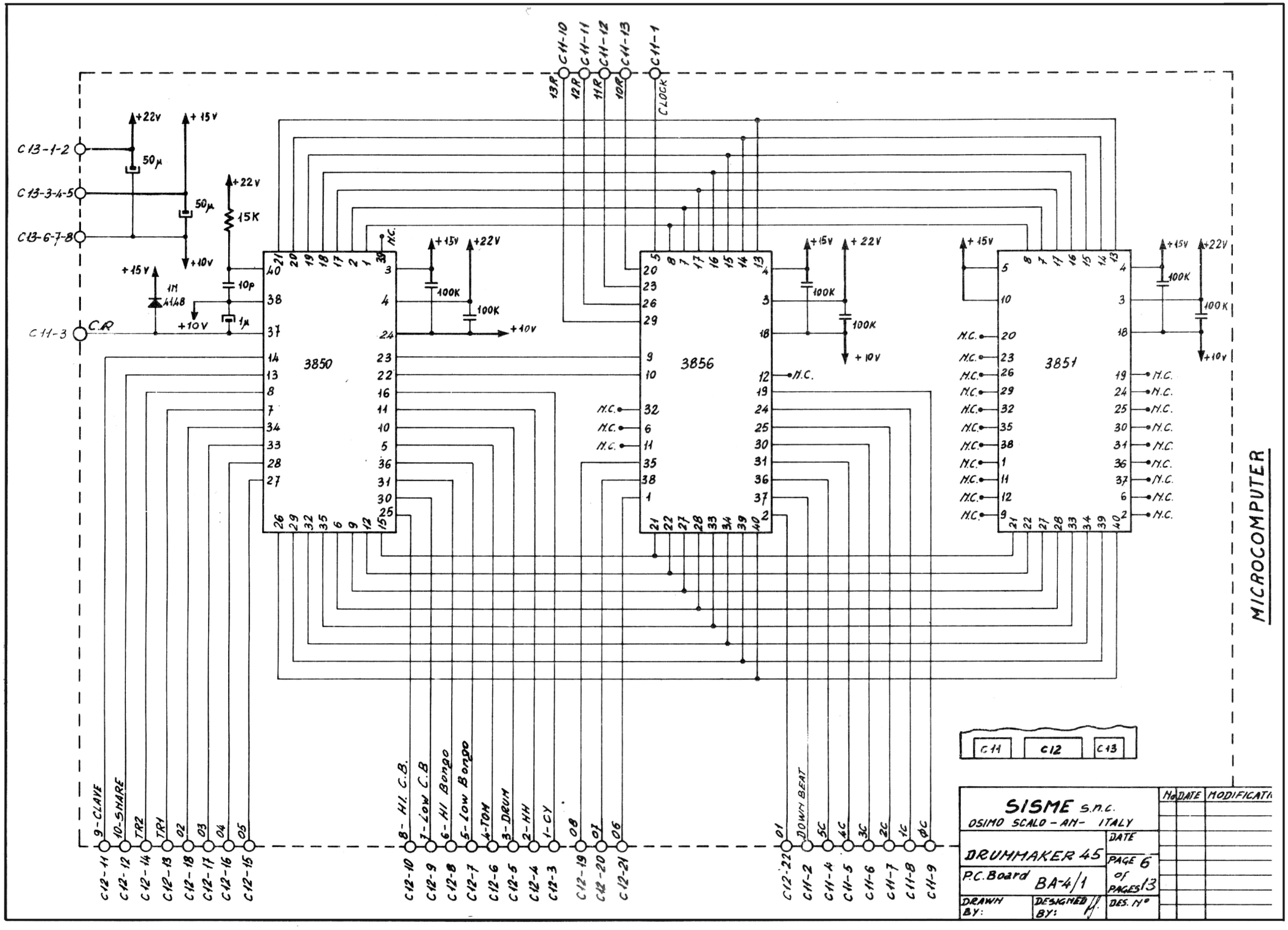
MICROCOMPUTER
3850
3856
3851
C13-1-2
C13-3-4-5
C13-6-7-8
C11-3
C.R
+22V
+15V
+10V
50µ
15K
10p
1µ
1M
4148
100K
N.C.
13R
12R
11R
10R
C11-10
C11-11
C11-12
C11-13
C11-1
CLOCK
9-CLAVE
10-SHARE
TR2
TR1
02
03
04
05
8- HI. C.B.
7-Low C.B
6-HI Bongo
5-Low Bongo
4-TOM
3-DRUM
2-HH
1-CY
08
01
06
DOWN BEAT
5C
4C
3C
2C
1C
ØC
C12-11
C12-12
C12-14
C12-13
C12-18
C12-17
C12-16
C12-15
C12-10
C12-9
C12-8
C12-7
C12-6
C12-5
C12-4
C12-3
C12-19
C12-20
C12-21
C12-22
C11-2
C11-4
C11-5
C11-6
C11-7
C11-8
C11-9
C11
C12
C13
SISME s.n.c.
OSIMO SCALO - AN - ITALY
DRUMMAKER 45
P.C. Board BA-4/1
DRAWN BY:
DESIGNED BY:
DATE
PAGE 6 of PAGES 13
DES. N°
No
DATE
MODIFICATI

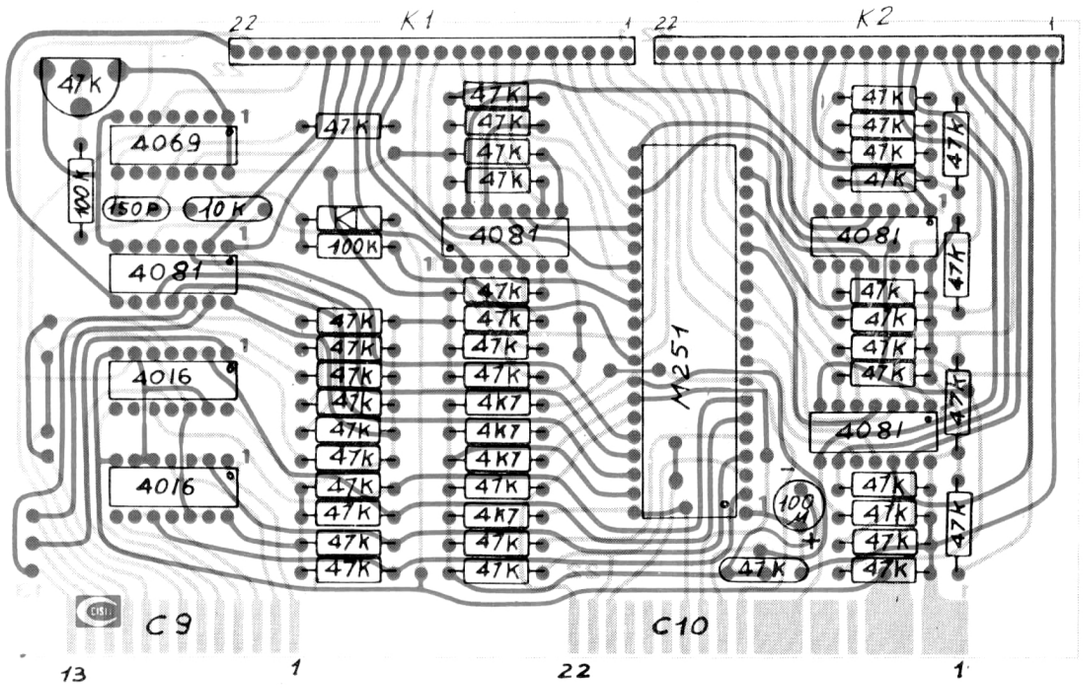

META BA5

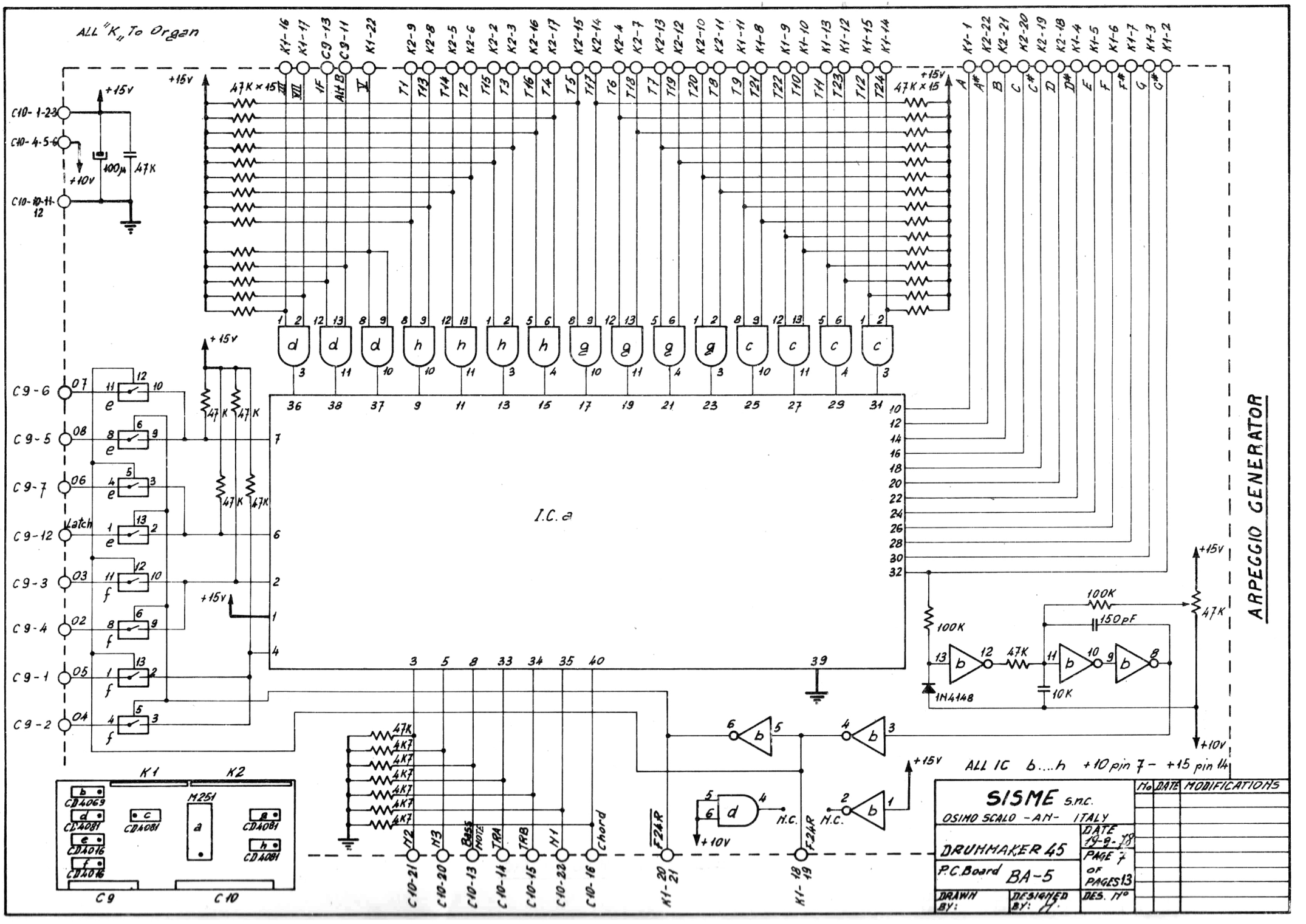
ALL "K" To Organ
ARPEGGIO GENERATOR
I.C. a
ALL IC b....h +10 pin 7 - +15 pin 14
SISME s.n.c.
OSIMO SCALO - AN - ITALY
DRUMMAKER 45
P.C.Board BA-5
DATE 19-9-78
PAGE 7 OF PAGES 13
DRAWN BY:
DESIGNED BY:
DES. N°
No DATE MODIFICATIONS
K1
K2
M251
CD4069
CD4081
CD4016
C9
C10

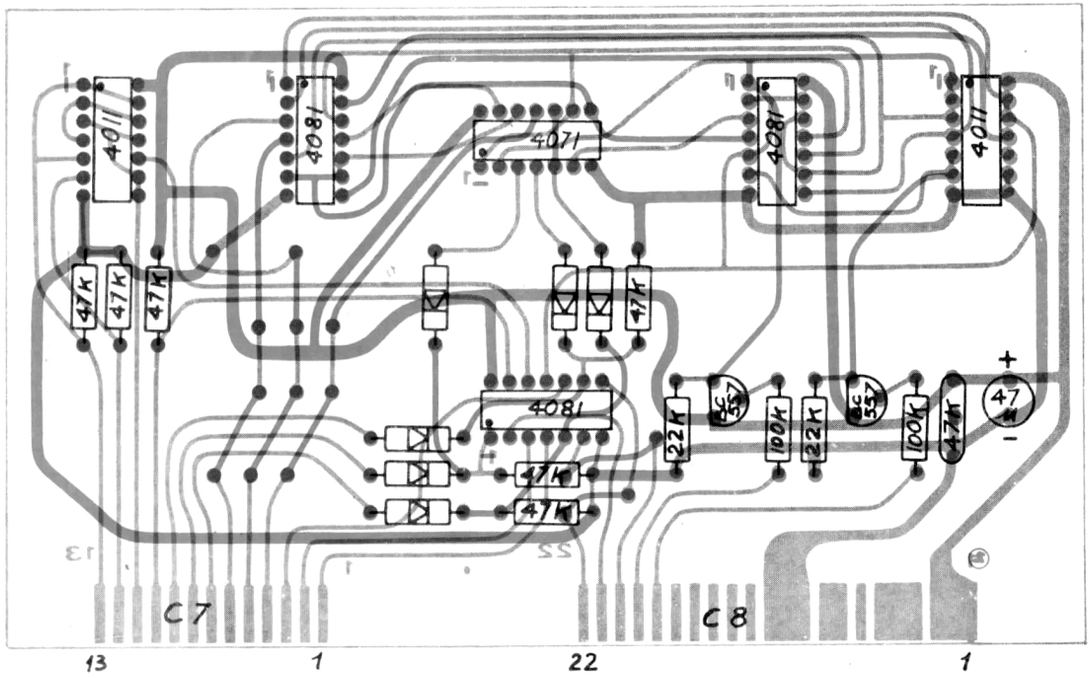
4011
4081
4071
4081
4011
47K
47K
47K
47K
47K
47K
4081
22K
BC 557
100K
22K
BC 557
100K
47K
47
+
-
C7
C8
13
1
22
1

META BA6

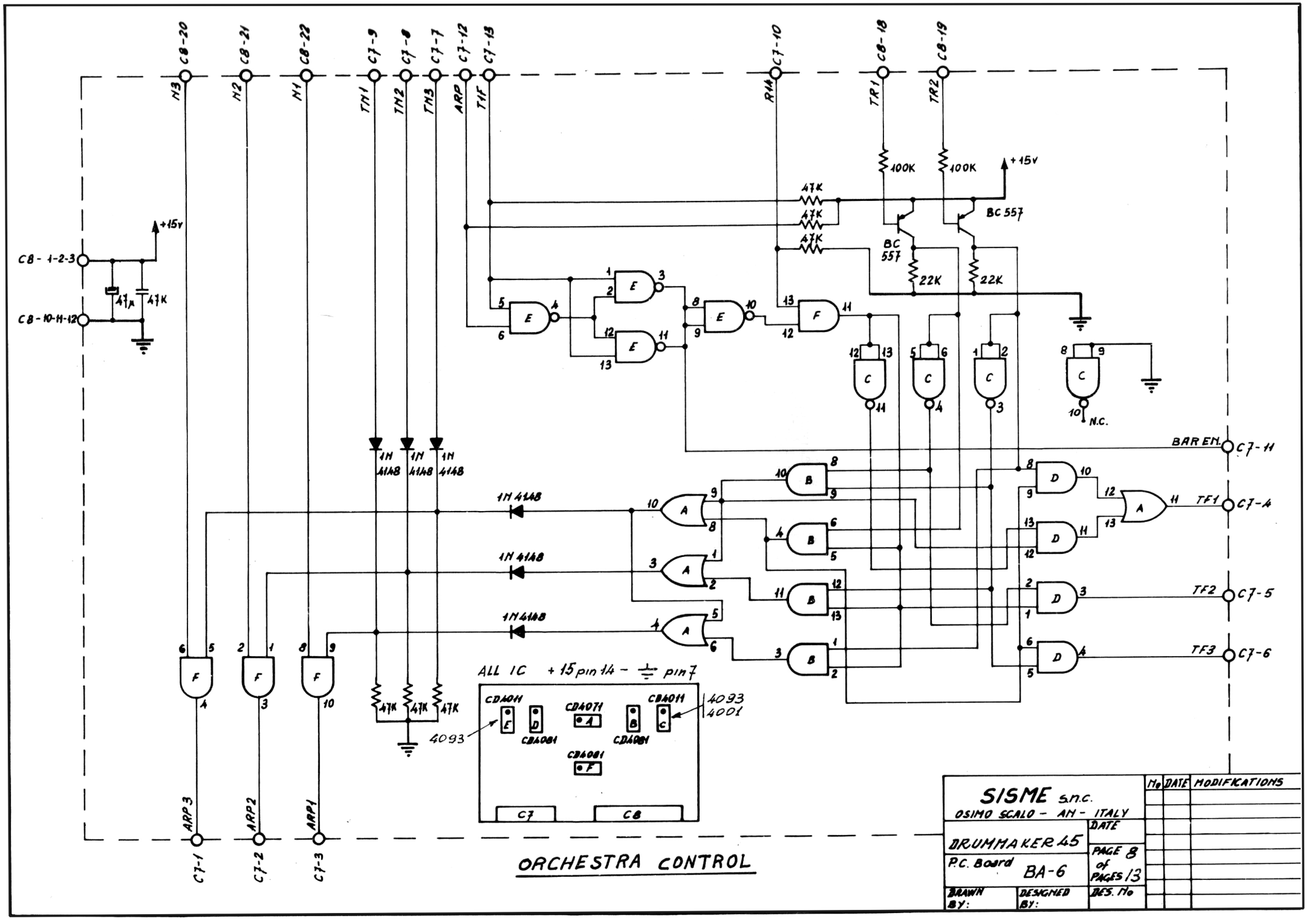
C8-20
C8-21
C8-22
C7-9
C7-8
C7-7
C7-12
C7-13
C7-10
C8-18
C8-19
N3
N2
N1
TH1
TH2
TH3
ARP
T1F
R14
TR1
TR2
+15V
100K
47K
22K
BC 557
C8 - 1-2-3
C8 - 10-11-12
47µ
1N 4148
BAR EN.
C7-11
TF1
C7-4
TF2
C7-5
TF3
C7-6
N.C.
ALL IC + 15 pin 14 - ⏚ pin 7
CD4011
CD4071
CD4081
4093
4001
C7
C8
ARP3
ARP2
ARP1
C7-1
C7-2
C7-3
ORCHESTRA CONTROL
SISME s.n.c.
OSIMO SCALO - AN - ITALY
DRUMMAKER 45
P.C. Board BA-6
PAGE 8 of PAGES 13
DATE
DRAWN BY:
DESIGNED BY:
DES. No
No
DATE
MODIFICATIONS

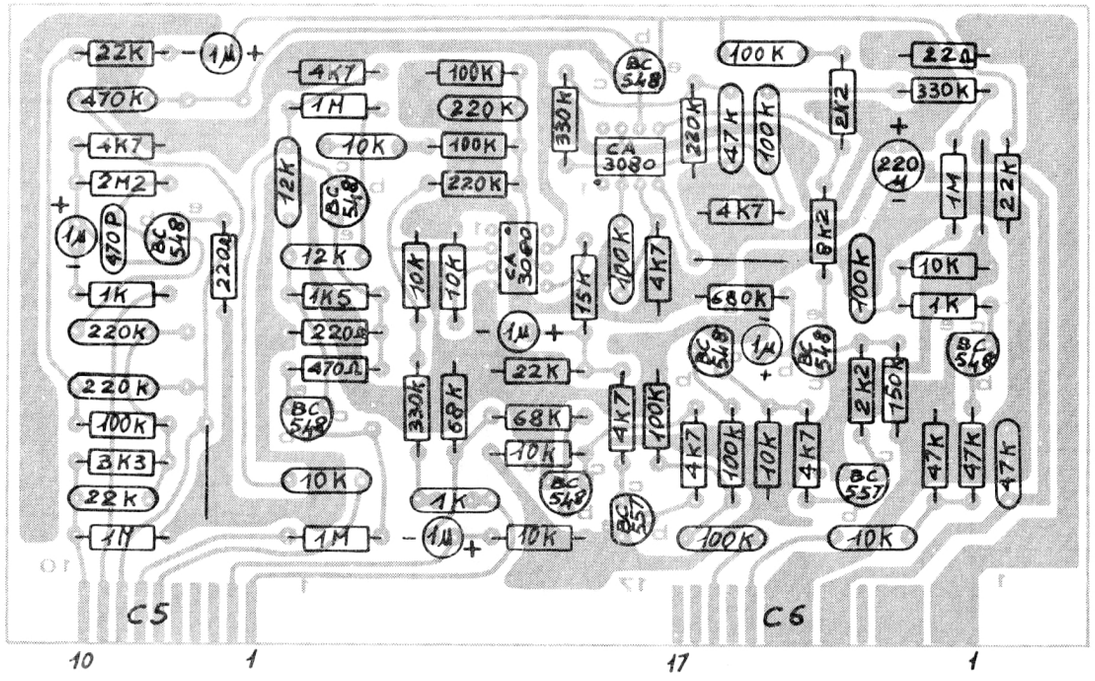
22K
1µ
470K
4K7
2M2
1µ
470P
BC 548
220Ω
1K
220K
220K
100K
3K3
22K
1M
4K7
1M
10K
12K
BC 548
12K
1K5
220Ω
470Ω
BC 548
10K
1M
1µ
100K
220K
100K
220K
10K
10K
330K
68K
CA 3080
1µ
22K
68K
10K
1K
BC 548
10K
330K
CA 3080
15K
100K
4K7
4K7
100K
BC 557
BC 548
100K
220K
47K
100K
4K7
680K
BC 548
1µ
BC 548
4K7
100K
10K
4K7
BC 557
100K
10K
220Ω
330K
2K2
220 µ
1M
22K
8K2
100K
10K
1K
BC 548
2K2
750K
47K
47K
47K
C5
C6
10
1
17
1

META BA7

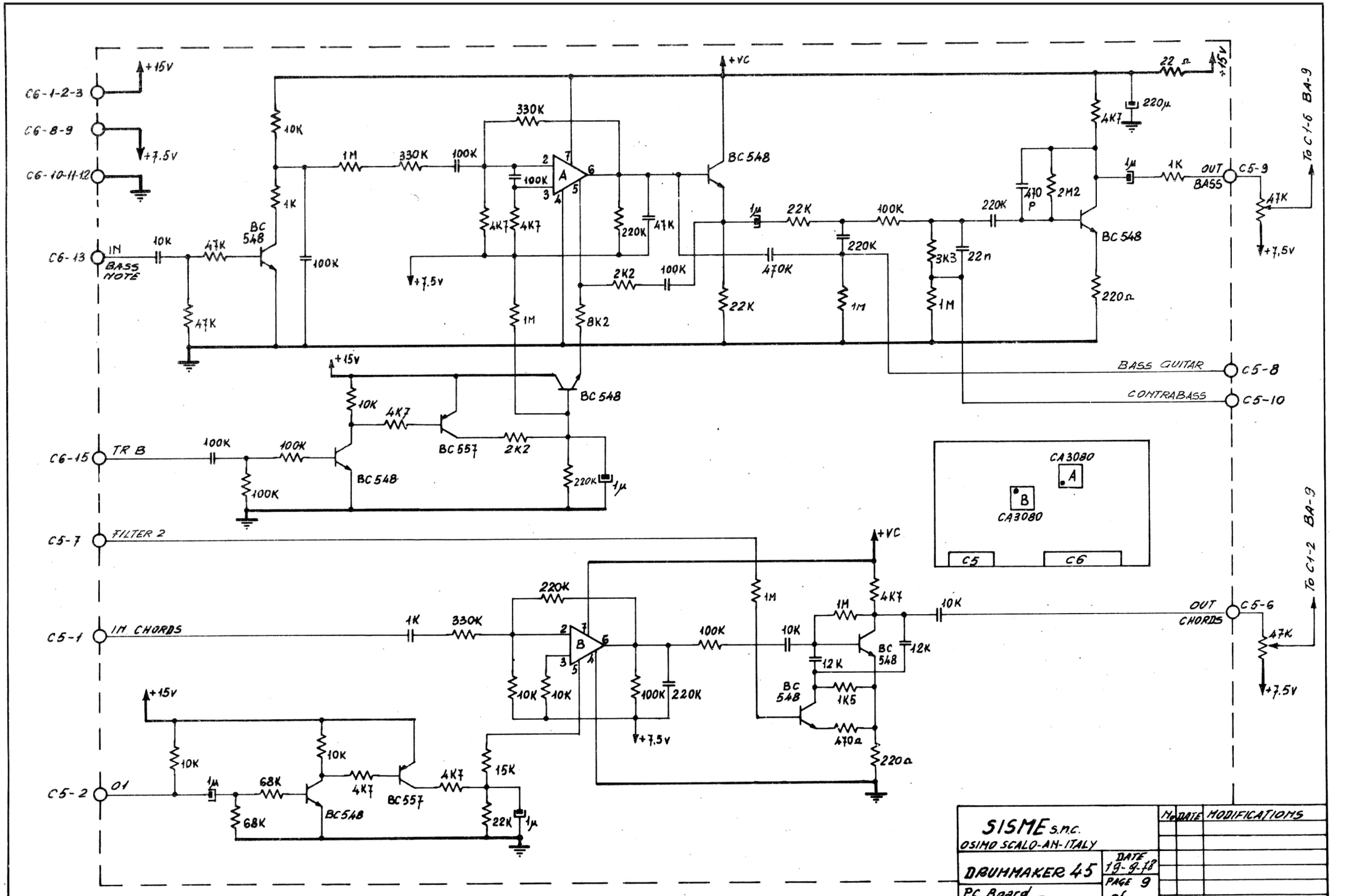

BASS AND CHORDS FILTERS

SISME s.n.c. OSIMO SCALO-AN-ITALY			
DRUMMAKER 45		DATE 19-9-78	
P.C. Board BA-7		PAGE 9 of PAGES 13	
DRAWN BY:	DESIGNED BY: H.	DES. No	

No	DATE	MODIFICATIONS

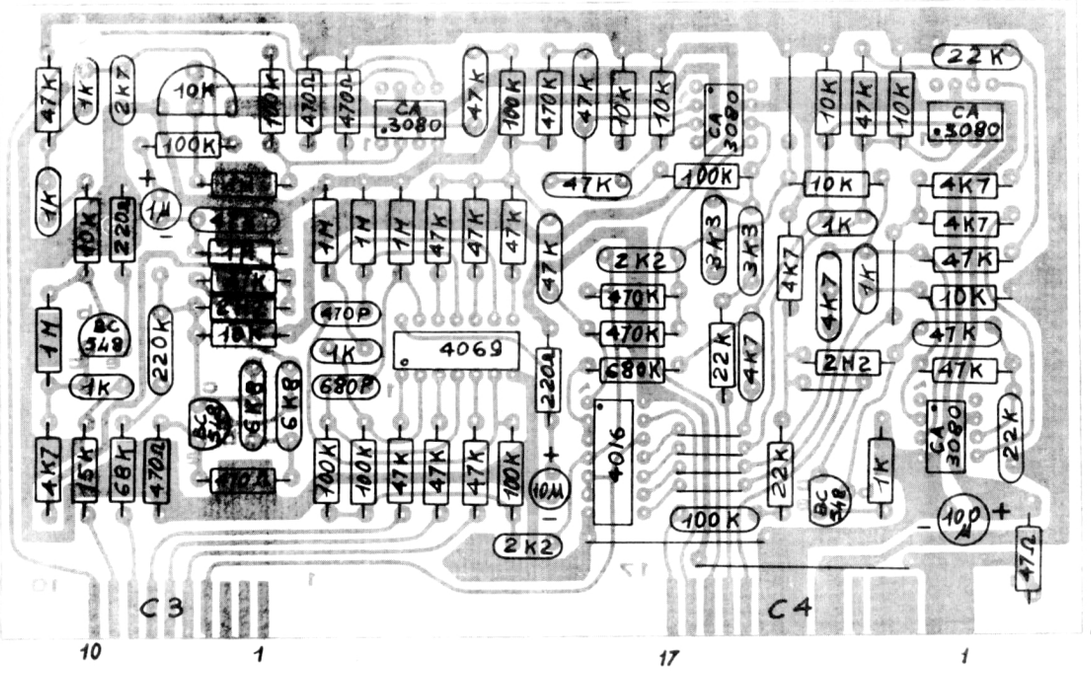

META BAB

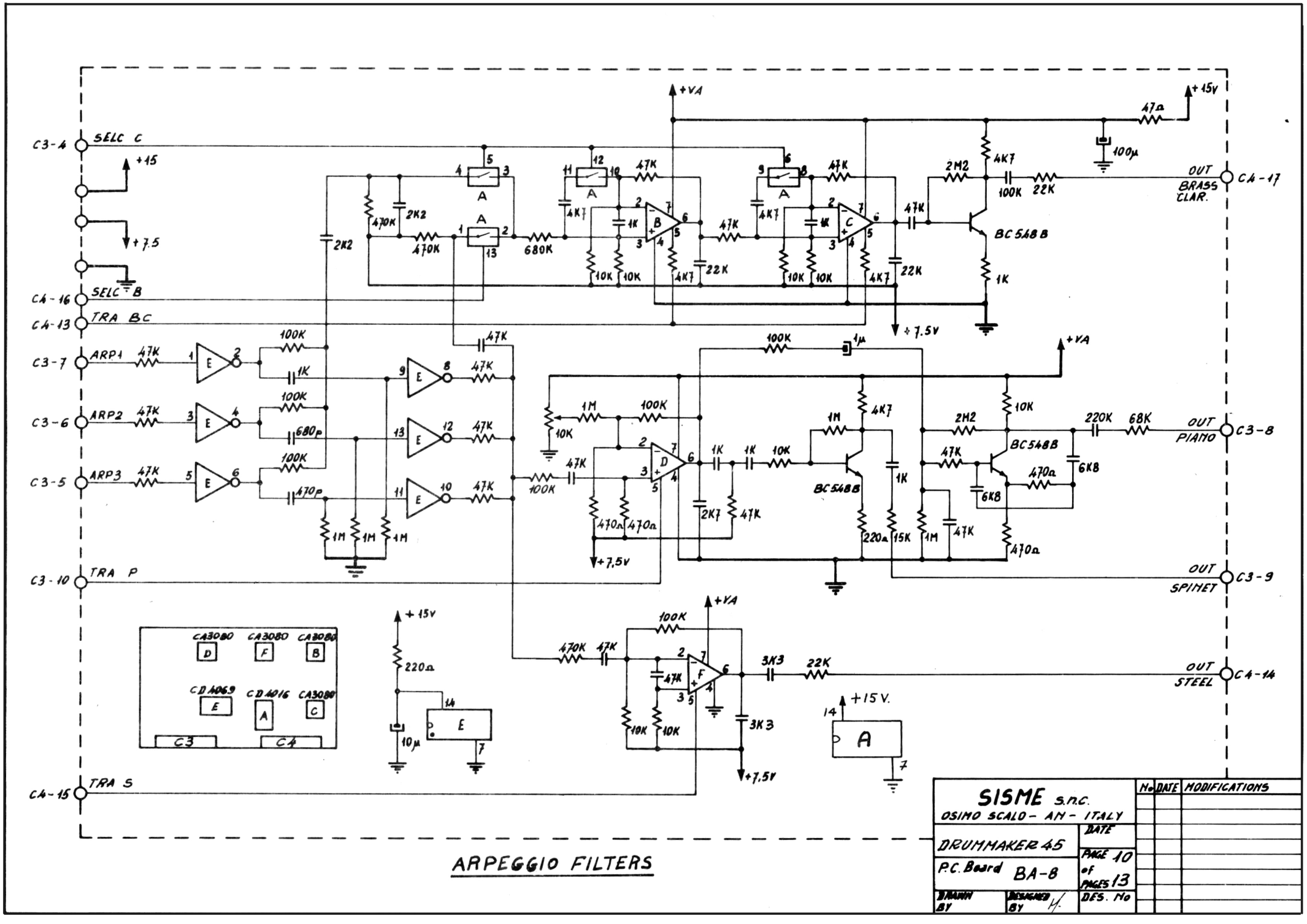

ARPEGGIO FILTERS

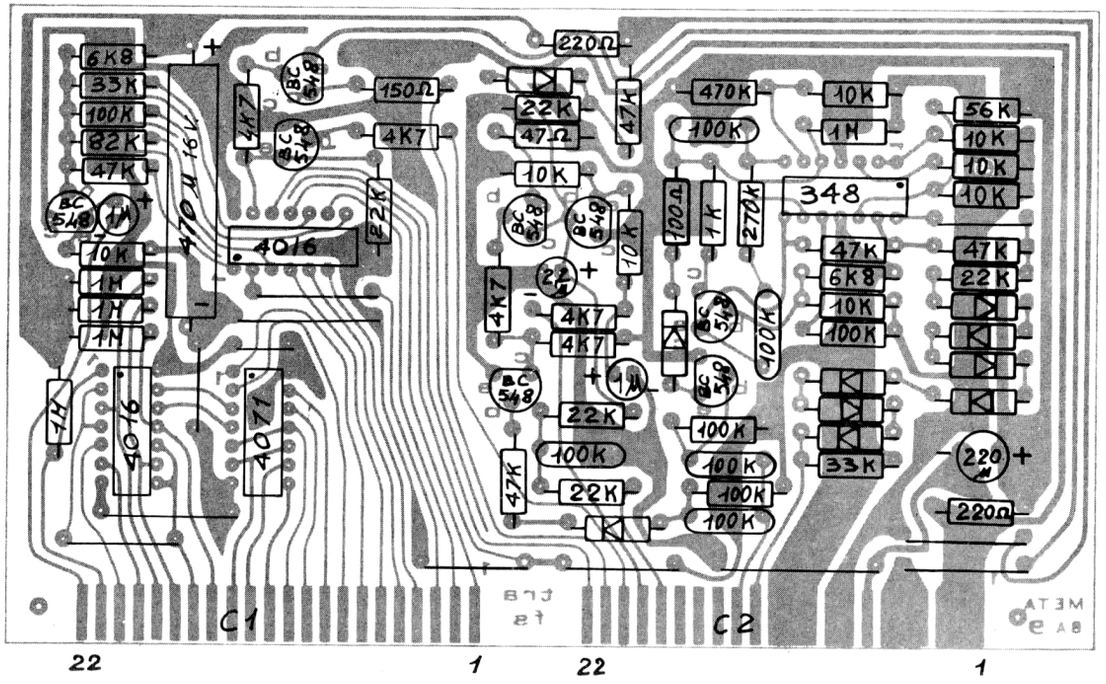
6K8
33K
100K
82K
47K
BC 548
1M
10K
1M
1M
1M
470μ 16V
4K7
BC 548
BC 548
150Ω
4K7
22K
4016
4016
4071
220Ω
22K
47Ω
47K
10K
BC 548
BC 548
10K
22μ
4K7
4K7
4K7
BC 548
1M
22K
100K
47K
22K
470K
100K
10K
1M
100Ω
1K
270K
348
BC 548
BC 548
100K
100K
100K
100K
100K
56K
10K
10K
10K
47K
6K8
10K
100K
47K
22K
33K
220μ
220Ω
C1
C2
22
1
22
1

META BA9

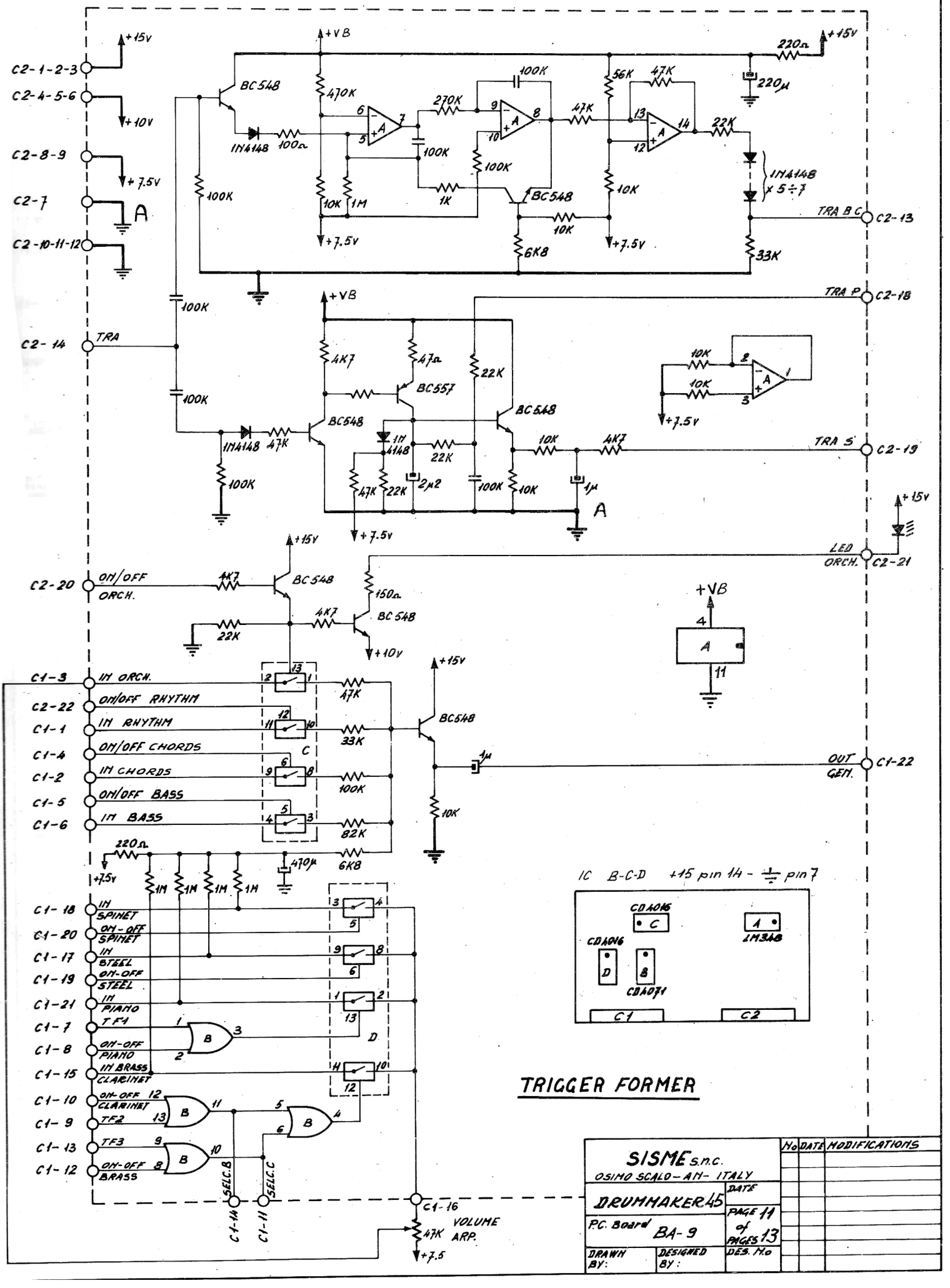

C2-1-2-3
C2-4-5-6
C2-8-9
C2-7
C2-10-11-12
C2-14
TRA
C2-20
ON/OFF ORCH.
C1-3
IN ORCH.
C2-22
ON/OFF RHYTHM
C1-1
IN RHYTHM
C1-4
ON/OFF CHORDS
C1-2
IN CHORDS
C1-5
ON/OFF BASS
C1-6
IN BASS
C1-18
IN SPINET
C1-20
ON-OFF SPINET
C1-17
IN STEEL
C1-19
ON-OFF STEEL
C1-21
IN PIANO
C1-7
TF1
C1-8
ON-OFF PIANO
C1-15
IN BRASS CLARINET
C1-10
ON-OFF CLARINET
C1-9
TF2
C1-13
TF3
C1-12
ON-OFF BRASS
SELC.B
SELC.C
C1-14
C1-11
C1-16
VOLUME ARP.
TRA B C
C2-13
TRA P
C2-18
TRA S
C2-19
LED ORCH.
C2-21
OUT GEN.
C1-22
BC548
BC557
1N4148
+15V
+10V
+7.5V
+VB
IC B-C-D +15 pin 14 - ⏚ pin 7
CD4016
CD4071
LM348
C1
C2
TRIGGER FORMER
SISME s.n.c.
OSIMO SCALO - AN - ITALY
DRUMMAKER 45
P.C. Board BA-9
PAGE 11 of PAGES 13
DRAWN BY:
DESIGNED BY:
DES. No
No
DATE
MODIFICATIONS

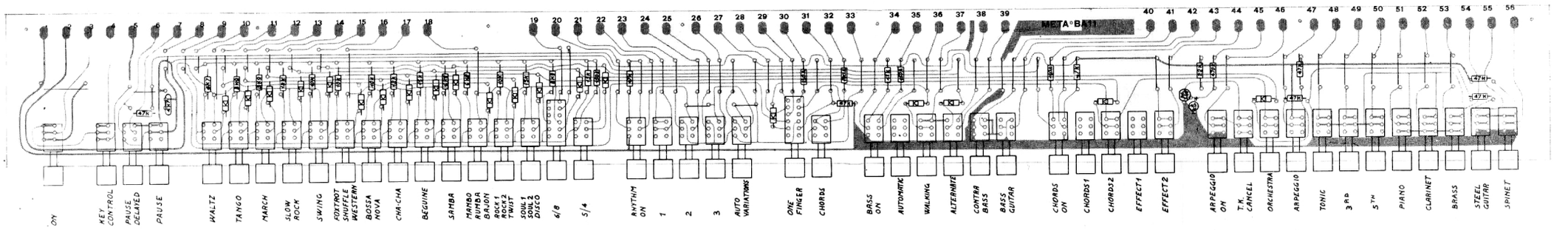

META BA11
ON
KEY CONTROL
PAUSE DELAYED
PAUSE
WALTZ
TANGO
MARCH
SLOW ROCK
SWING
FOXTROT SHUFFLE WESTERN
BOSSA NOVA
CHA-CHA
BEGUINE
SAMBA
MAMBO RUMBA BAJON
ROCK 1 ROCK 2 TWIST
SOUL 1 SOUL 2 DISCO
6/8
5/4
RHYTHM ON
1
2
3
AUTO VARIATIONS
ONE FINGER
CHORDS
BASS ON
AUTOMATIC
WALKING
ALTERNATE
CONTRA BASS
BASS GUITAR
CHORDS ON
CHORDS 1
CHORDS 2
EFFECT 1
EFFECT 2
ARPEGGIO ON
T.K. CANCEL
ORCHESTRA
ARPEGGIO
TONIC
3RD
5TH
PIANO
CLARINET
BRASS
STEEL GUITAR
SPINET

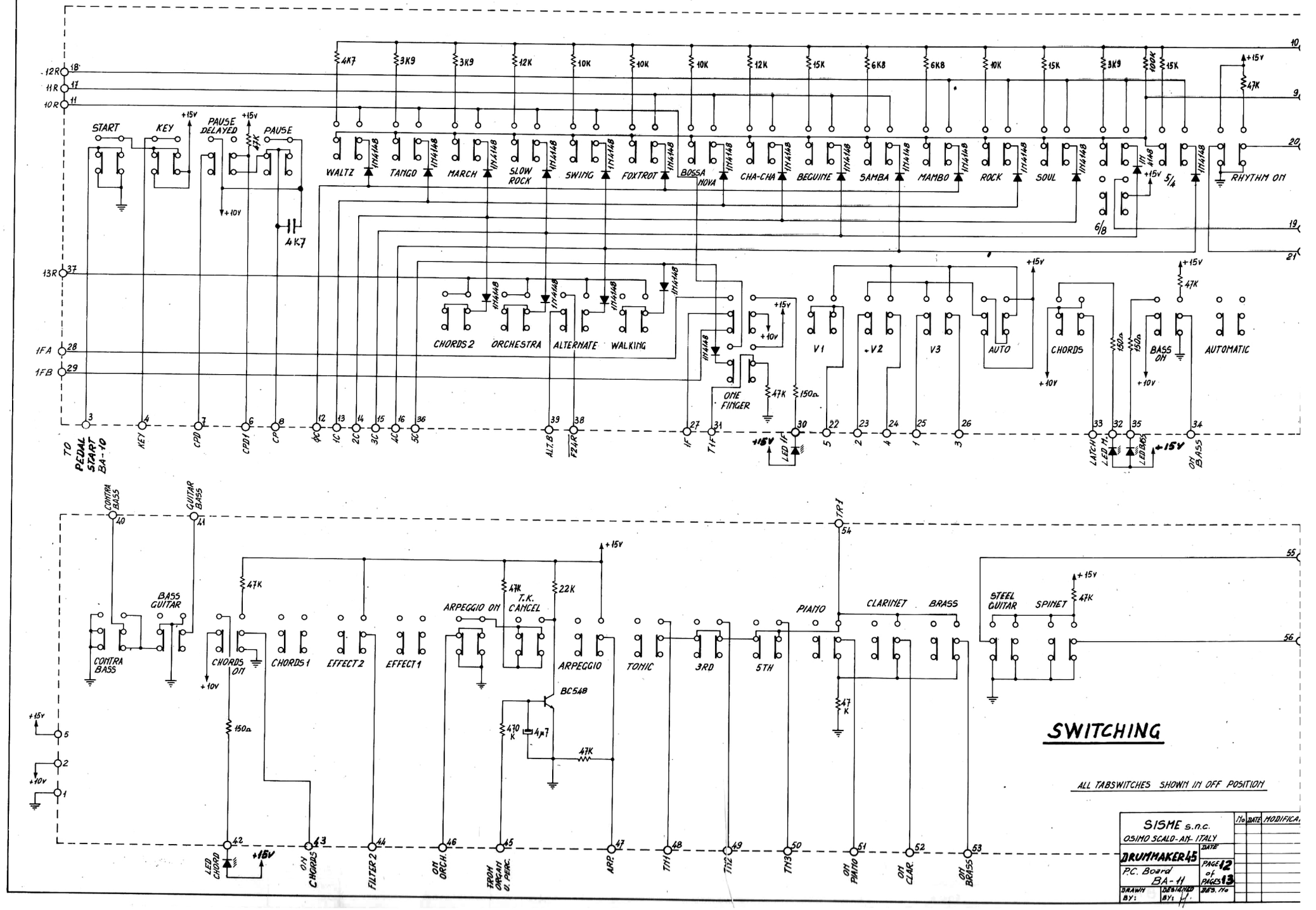
SWITCHING
ALL TABSWITCHES SHOWN IN OFF POSITION
START
KEY
PAUSE DELAYED
PAUSE
WALTZ
TANGO
MARCH
SLOW ROCK
SWING
FOXTROT
BOSSA NOVA
CHA-CHA
BEGUINE
SAMBA
MAMBO
ROCK
SOUL
RHYTHM ON
CHORDS 2
ORCHESTRA
ALTERNATE
WALKING
ONE FINGER
V1
V2
V3
AUTO
CHORDS
BASS ON
AUTOMATIC
TO PEDAL START BA-10
CONTRA BASS
GUITAR BASS
BASS GUITAR
CHORDS ON
CHORDS 1
EFFECT 2
EFFECT 1
ARPEGGIO ON
T.K. CANCEL
ARPEGGIO
TONIC
3RD
5TH
PIANO
CLARINET
BRASS
STEEL GUITAR
SPINET
BC548
SISME s.n.c.
OSIMO SCALO-AN- ITALY
DRUMMAKER45
P.C. Board BA-11
PAGE 12 of PAGES 13

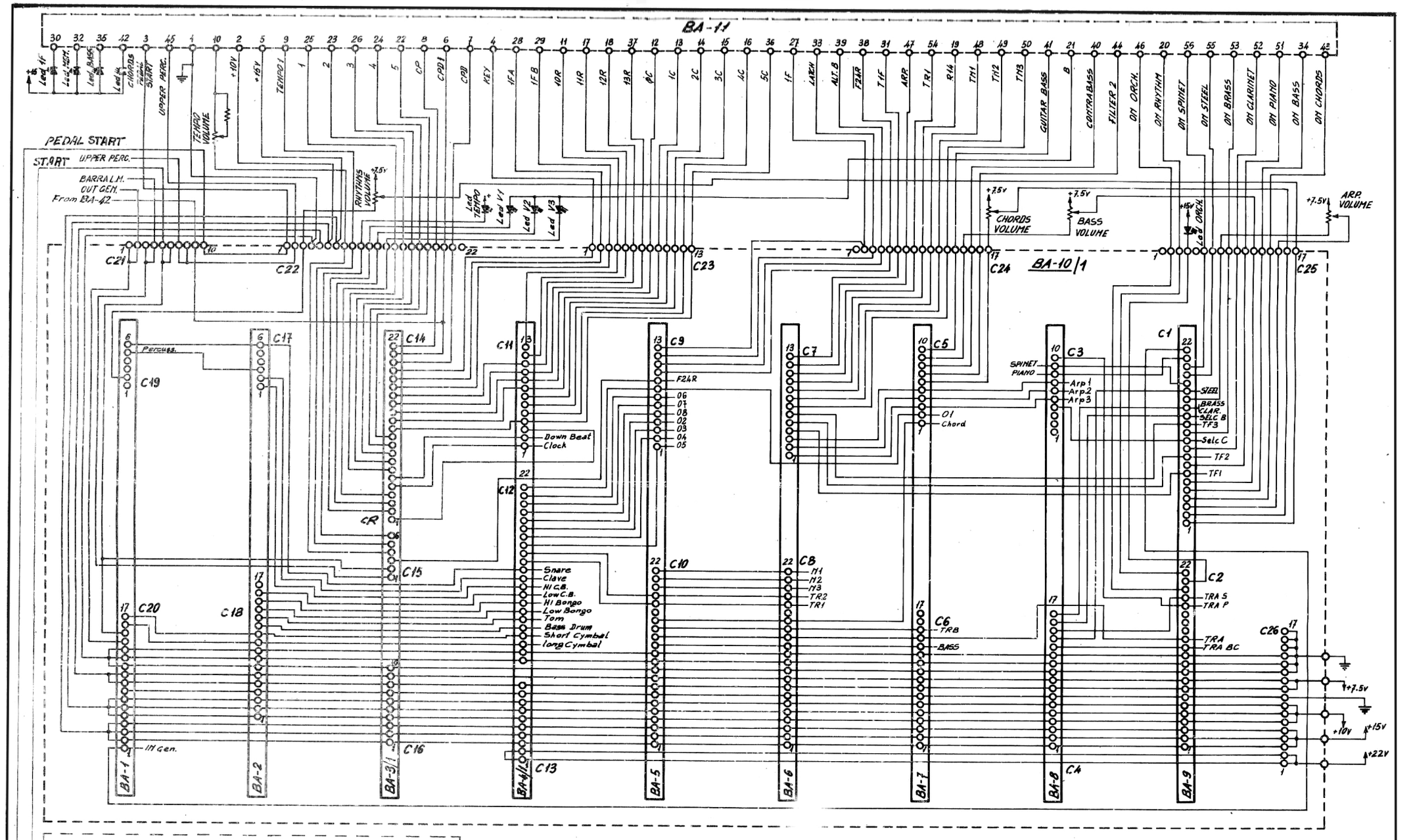

MAIN BOARD

SISME s.n.c. OSIMO SCALO - AN - ITALY			
DRUMMAKER 45	DATE		
P.C. BOARD BA-10/1 - BA49	PAGE 13 of PAGES 13		
DRAWN BY:	DESIGNED BY:	DES. N°	

No	DATE	MODIFICATIONS

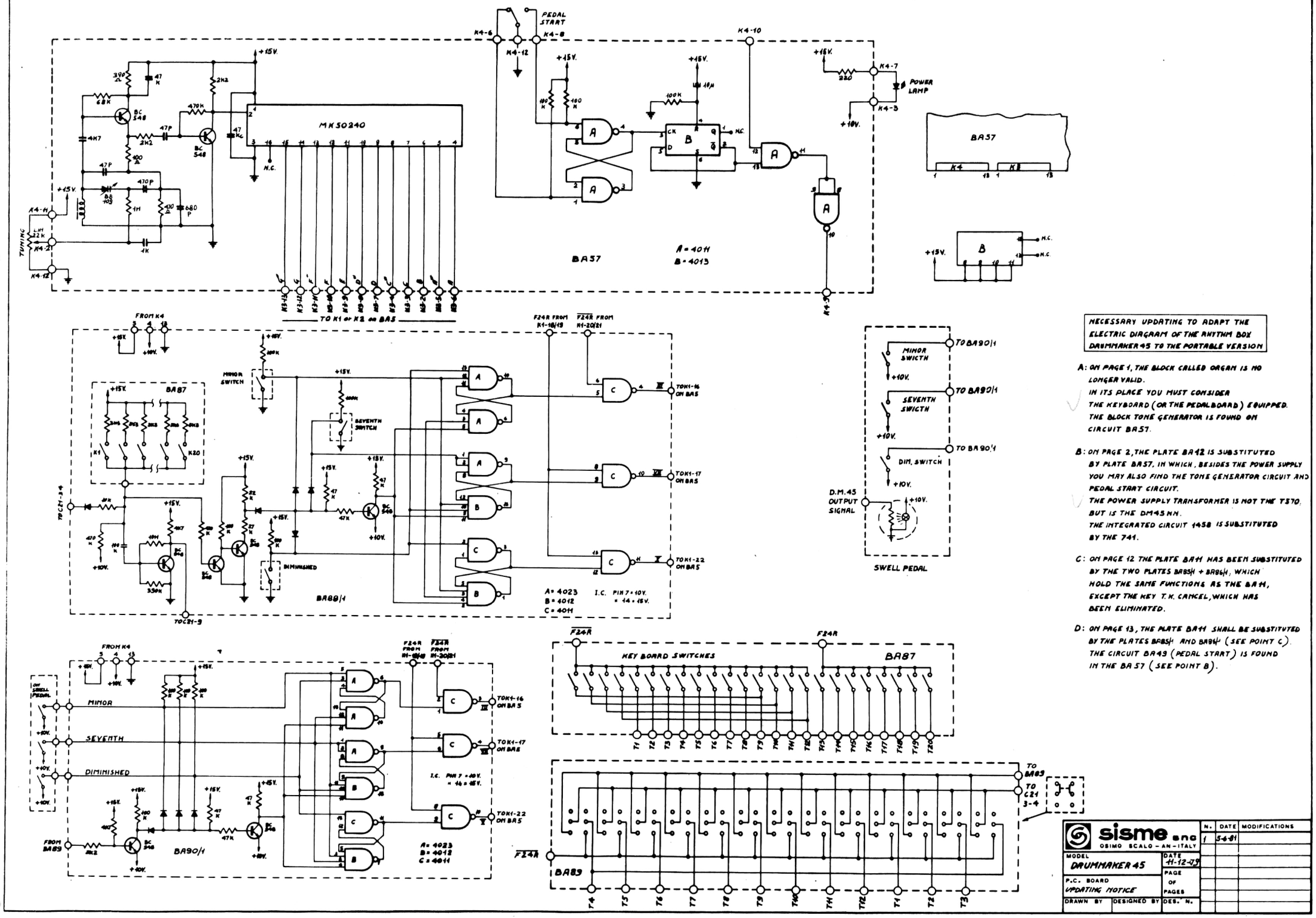

NECESSARY UPDATING TO ADAPT THE ELECTRIC DIAGRAM OF THE RHYTHM BOX DRUMMAKER 45 TO THE PORTABLE VERSION

A: ON PAGE 1, THE BLOCK CALLED ORGAN IS NO LONGER VALID.
IN ITS PLACE YOU MUST CONSIDER THE KEYBOARD (OR THE PEDALBOARD) EQUIPPED. THE BLOCK TONE GENERATOR IS FOUND ON CIRCUIT BA57.

B: ON PAGE 2, THE PLATE BA12 IS SUBSTITUTED BY PLATE BA57, IN WHICH, BESIDES THE POWER SUPPLY YOU MAY ALSO FIND THE TONE GENERATOR CIRCUIT AND PEDAL START CIRCUIT.
THE POWER SUPPLY TRANSFORMER IS NOT THE T370, BUT IS THE DM45 MM.
THE INTEGRATED CIRCUIT 1458 IS SUBSTITUTED BY THE 741.

C: ON PAGE 12 THE PLATE BA11 HAS BEEN SUBSTITUTED BY THE TWO PLATES BA85H + BA86H, WHICH HOLD THE SAME FUNCTIONS AS THE BA11, EXCEPT THE KEY T.K. CANCEL, WHICH HAS BEEN ELIMINATED.

D: ON PAGE 13, THE PLATE BA11 SHALL BE SUBSTITUTED BY THE PLATES BA85H AND BA86H (SEE POINT C). THE CIRCUIT BA49 (PEDAL START) IS FOUND IN THE BA57 (SEE POINT B).

sisme s.n.c.
OSIMO SCALO - AN - ITALY

MODEL	DATE
DRUMMAKER 45	11-12-79
P.C. BOARD UPDATING NOTICE	PAGE OF PAGES
DRAWN BY / DESIGNED BY	DES. N.

N.	DATE	MODIFICATIONS
1	5-6-81	